ISGEC

PRESSES

MECHANICAL & HYDRAULIC

Servo Presses

MAS Series

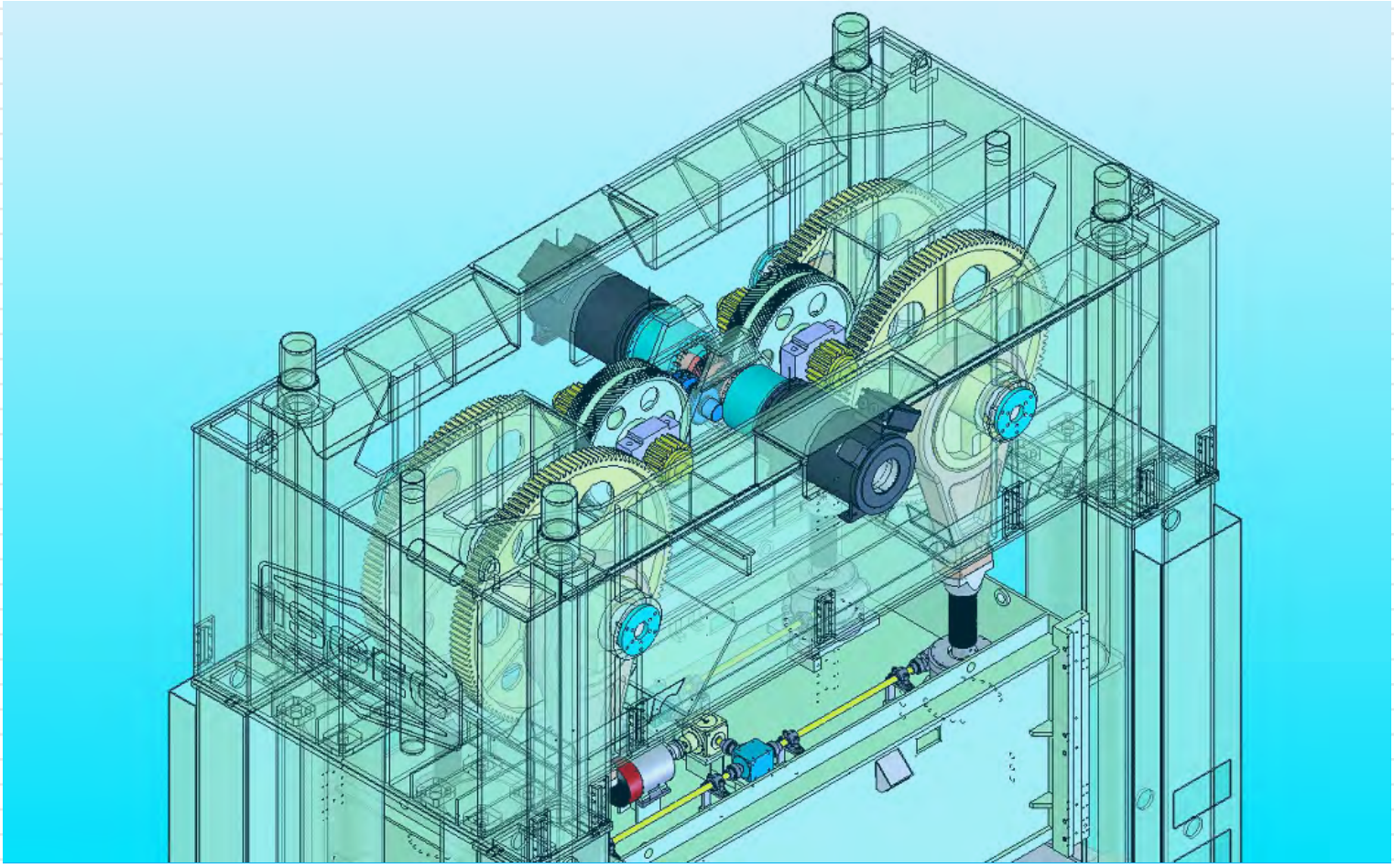

Safeties Conform to:
CE (EN-692:2008)
OSHA 1910.217
CSA Z142-10
NR-12

ISO 9001:2008
ISO 14001:2004
OHSAS 18001 :2007

Output - Versatility Redefined

Versatility-freely programmable kinematics

- Slide kinematics quickly and easily adaptable to parameters of Process, Die, Automation system and eliminates adverse effects of motion limitations of conventional press.
- Wide range of Tryout functions in production press.
- User Programmable stroke heights and motion sequences.
- Motion profile adjustment to suit part transport process with Progressive & Transfer Dies.

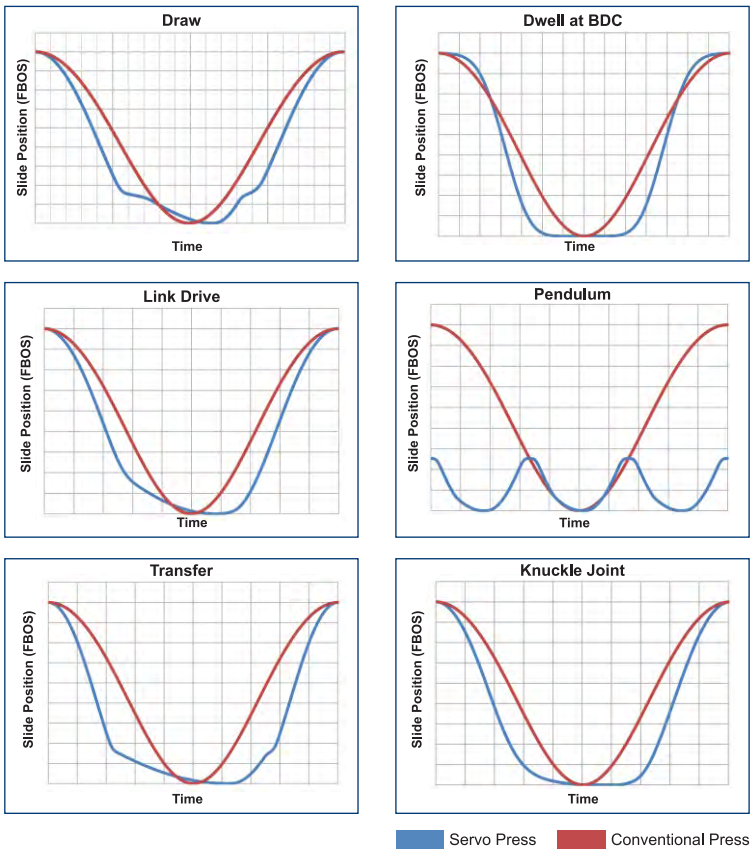

Increased Output

- User Programmable parameters of time & distance sequences allow possibility to integrate several processes in press cycle resulting in higher output.
- Pendulum Operating Mode enables higher output.
- Individual part curves stored in die database and quickly available for future use.

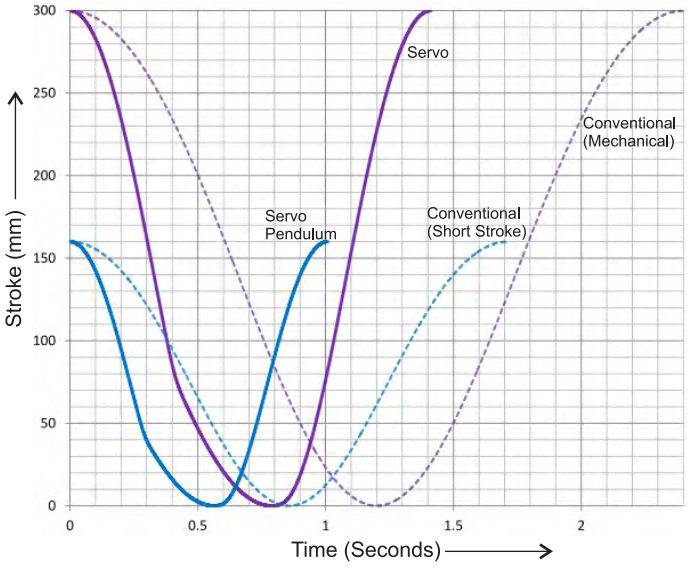

Energy Management

- In contrast to conventional Hydraulic & Mechanical Presses wherein energy sources are continuously consuming power, Servo Presses use regenerative feature thus storing energy during braking & deceleration mode. This stored energy is subsequently utilized during acceleration mode resulting in energy efficiency and reduced power consumption.

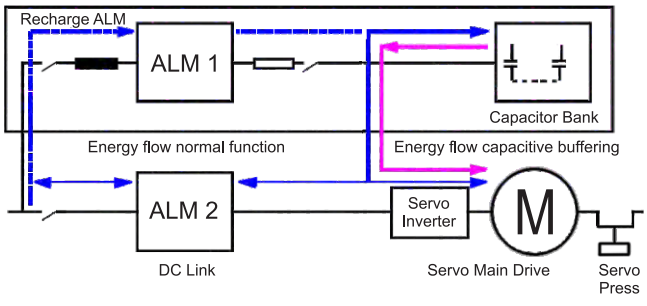

Operational Advantages

- Increased part quality and die life due to controlled motion sequence optimally adapted to process requirements.
- Reduced rejections & less rework.
- Reduced snap through loads and spring back.
- Easier maintenance and reduced maintenance cost compared to conventional mechanical presses due to fewer mechanical components.
- Reduced stamping noise and vibrations due to precise control of speed.

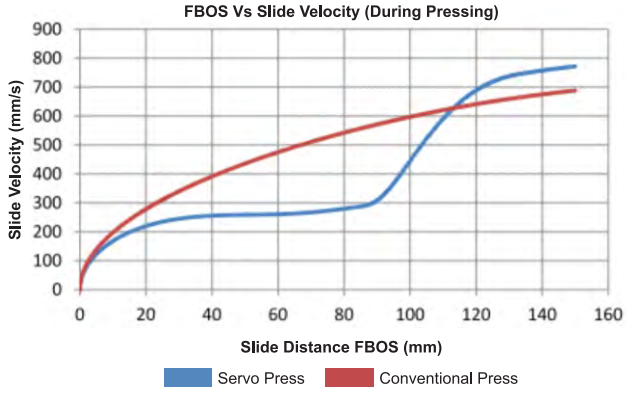

Quick Die Change System

- Electrically driven Moving Bolsters with alternative options of movement for Quick Die Change and higher productivity.
- Die Centering Slots on Bolster Plate for quick die location.
- T-Slots as per JIS, JIC & DIN depending upon user's requirement.
- Automatic or Semi Automatic Die Change feature available as optional.
- On demand 'Hydraulically Operated Manually Positioned' or 'Automatic' Die Clamps provided.

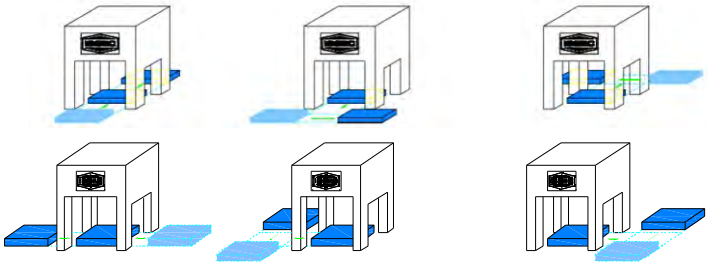

Pendulum Operating Mode

- Pendulum Operating Mode enables programmable slide stroke heights. Reversing movement of torque motor means that eccentric drive has an oscillating motion and alternates between forward in one stroke and backward in the next stroke. This significantly increases output and energy efficiency.

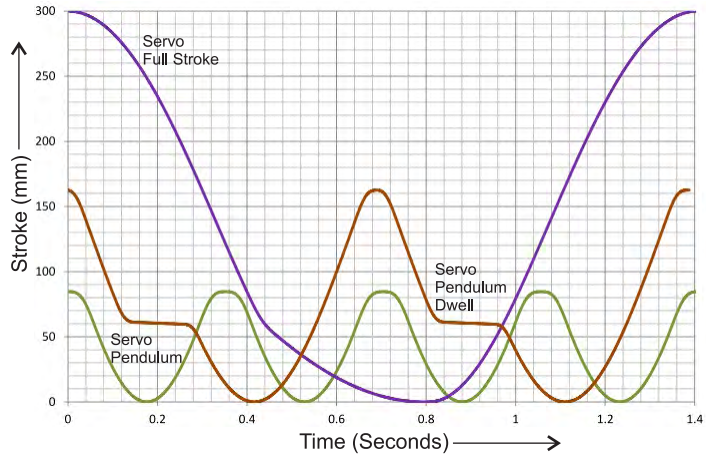

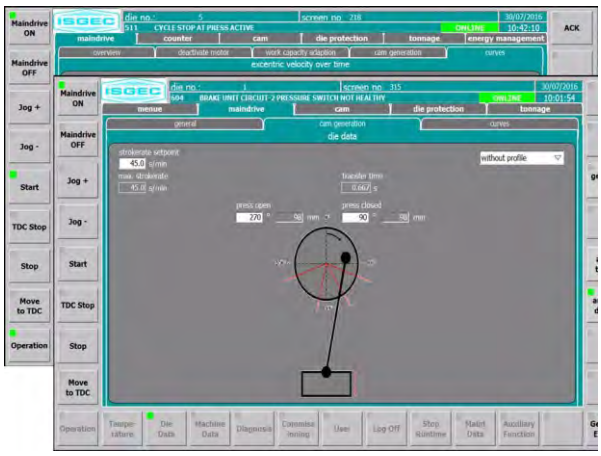

Ease of Operation & Interface

- Programmable Logic Controller with user friendly Operator Interface has operator Screens. HMI (Human Machine Interface) with Diagnostic features developed by constant improvements through feedback from Press users.
- On demand interfacing hardware for reliable interface with Automation.
- Remote online diagnosis feature provided on demand.
- Complete Project Management including Interface with Automation & Dies provided.

Safeties as per International Practices

- Immediate Press stoppage due to absence of high inertia of drive mechanism as compared with conventional mechanical presses.
- Inbuilt Servo lock in Servo Motor.
- Spring actuated hydraulically released safety brake for dual safety.

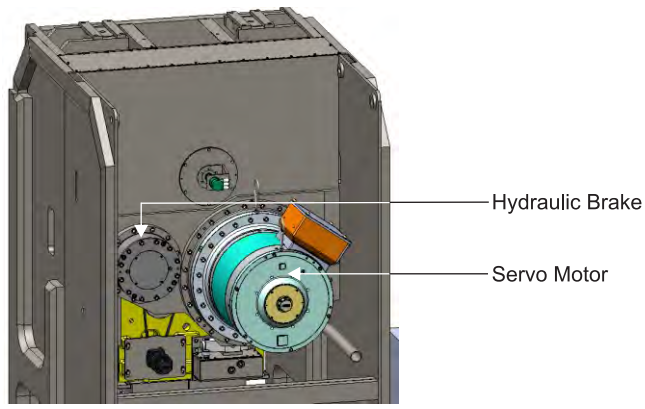

Standard Accessories

- Counter Balance Cylinder
- Hydraulic Overload Protection
- High Torque Servo Motor with Controls
- Motorised Slide Adjustment
- Centralised Re-circulating Automatic Oil Lubrication System
- Dual Check Safety Electrical Circuit
- Programmable Logic Controller
- User Friendly Touch Screen Interface
- Emergency Stop Buttons
- Die Area lights
- Energy Storage & Management System
- Portable Two Hand Operator Stand
- Production Counters (Total, Batch)
- Crank Angle Indicator
- Maintenance Tool Kit
- Safety Brake
- 6 Nos. Preset Motion Profiles
- Moving Bolsters

Optional Accessories

- Die Clamps for Quick Die Change
- Programmable Cam Switches
- Die Cushion
- Electronic Force Monitoring / Process Monitoring with Signature Analysis
- Anti Vibration Mounts
- Bearing Temperature Monitoring System
- Automatic Die Change System
- Slide Locking Device
- Moving Bolster with T-Track
- Die Automation Control
- Scrap Chute with Interlocked Opening Covers
- Photoelectric Guards on front and rear

Front of Line & End of Line Solutions

- Destacker/Coil Line with 3-D-Electronic Transfer system
- Robotic Auto stacking of parts

Wide Range of Presses

Servo Presses • Transfer Presses • Progressive Presses • High Speed Presses • Hot Stamping & Hot Forming Hydraulic Presses
Standard Straight Sided Mechanical & Hydraulic Presses • Blanking Lines • Tandem Press Lines - Mechanical & Hydraulic
Cold Forging Presses • Tryout & Die Spotting Presses • Gap Frame & Ring Frame Power Presses • Special Purpose Presses

ISGEC HEAVY ENGINEERING LTD.

www.isgec.com

Sales Office & Plant : Yamunanagar - 135 001, Haryana, India
Tel.: +91-1732-66 11 14, 66 11 18 E-mail: presses@isgec.com

Regional Offices:

Noida
A-4, Sector-24, Noida - 201 301, Uttar Pradesh, India
Tel.: +91-120-408 5390 Email: presses@isgec.com

Mumbai
Great Social Building, Sir Phirozshah Mehta Road, Fort, Mumbai 400 001, India
Tel.: +91-22-22 66 23 74 Email: presses.wr@isgec.com

Chennai
Grace Building, 3rd Floor, No.25, Mc Nichols Road, Chetpet, Chennai 600 031, India
Tel.: +91-44-28 36 13 75 Email: presses.sr@isgec.com

Kolkata
18, Main Road, Kalianiwas, Barrackpore, Kolkata 700 122, India
Tel.: +91-98363 61411 E-mail: presses.er@isgec.com

Ahmedabad
Tel.: +91-89301 11478 E-mail: presses.gr@isgec.com

Bangalore
Tel.: +91-89301 11654 E-mail: presses.br@isgec.com

Overseas Offices : Ontario, Canada • Dusseldorf, Germany

Sales Representatives : Brazil • China • France • Hungary • Indonesia • Italy • Malaysia • Mexico
Russia • South Africa • Spain • Thailand • Turkey • USA • Japan

Some of the accessories / fitments shown in the reference photograph may not be part of Standard equipment supplied.
Isgec reserves the right to change specifications without prior notice.
Details given in this Brochure are indicative & may change.

Printed in January 2018

WY/Presses/MAS L/0118/01/Dtp